Product Data

38/40BN Series Duct-Free Split Systems Cooling Only and Heat Pumps for High-Wall Applications

1 1/2 to 3 Nominal Tons

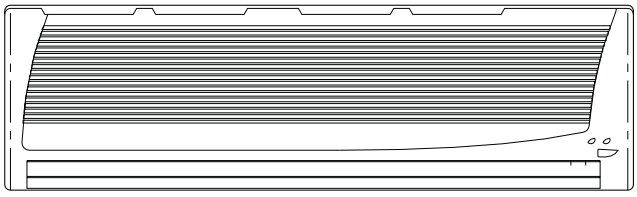

INDOOR UNIT

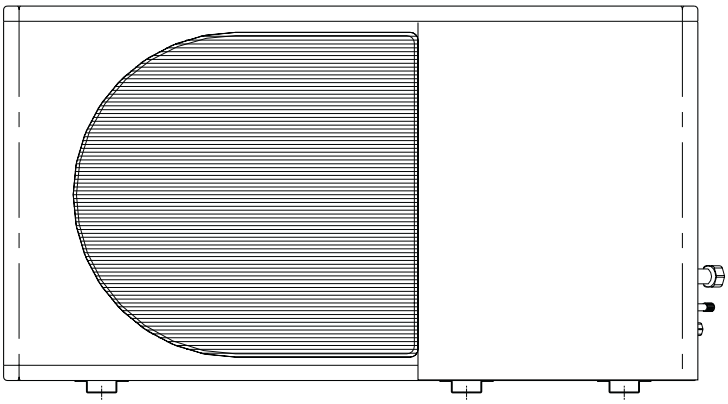

OUTDOOR UNIT

The Ideal Complement to Your Ducted System When It Is Impractical or Prohibitively Expensive to Use Ductwork

Features/Benefits

An inexpensive and creative solution to design problems

The 38/40BN series duct-free split systems are a matched combination of an outdoor condensing unit and an indoor fan coil units connected only by refrigerant tubing and wires.

The fan coil is mounted on the wall, near the ceiling. This selection of fan coils permits inexpensive and creative solutions to design problems such as:

- add-ons to current space (an office or family room addition)
- special space requirements (a computer room)
- when changes in the load cannot be handled by the existing system
- when adding air conditioning to spaces that are heated by hydronic or electric heat and have no ductwork
- historical renovations or any application where preserving the look of the original structure is essential

These compact indoor fan coil units take up very little space in the room and do not obstruct windows. The fan coils are attractively styled to blend with most room decors. Advanced system components incorporate innovative technology to provide reliable cooling performance at low sound levels.

The 38/40BN duct-free split systems offer the solution of choice. The compressor is outdoors, linked by refrigerant lines to an indoor fan coil located directly in the room it will heat or cool. These systems have minimal impact on the existing structure, and the design and interior of the conditioned space is not compromised by bulky ductwork. Because of these features, this duct-free split system can be installed in places where conventional ducted cooling simply cannot go.

Low sound levels

When noise is a concern, the duct-free split systems are the answer because you do not have to worry about duct design. There are no compressors indoors, either in the conditioned space or directly over it, and there is none of the noise usually generated by air being forced through ductwork. The indoor units are whisper quiet. The outdoor units operate at low sound levels, and are the perfect answer to sound level ordinances.

When sound ordinances and proximity to neighbors demand quiet operation, the 38BN unit is the right choice: The advanced, horizontal airflow design distributes air more evenly over the coil. The coil also acts as an extra sound-suppressing device before the air is discharged at a very low velocity.

Secure operation

If security is an issue, outdoor and indoor units are connected only by refrigerant piping and wiring to prevent intruders from crawling through ductwork. In addition, since 38BN units can be installed 6 in. away from outside walls, coils are protected from vandals and severe weather.

Fast installation

This compact duct-free split system takes only a few hours to install, since only wire and piping need to be run. The fast and easy installation ensures minimal disruption to customers in the home or workplace. This is an added advantage of the 38/40BN duct-free split systems, especially in retrofit situations.

Features like mounting brackets make the unit very easy to install.

Simple servicing and maintenance

Removing a panel on outdoor units provides immediate access to the isolated compressor and control compartment, allowing a service technician access to check unit operation without a loss of condenser airflow. In addition, the draw-thru design of the outdoor section means that dirt accumulates on the outside surface of the coil. Coils can be cleaned quickly from the inside using a pressure hose and detergent.

On all indoor units, service and maintenance expense is reduced due to easy-to-change cleanable filters. In addition, these high wall systems have extensive self-diagnostics to assist in troubleshooting.

Built-in reliability

Duct-free split system indoor and outdoor units are designed to provide years of trouble-free operation.

The high wall indoor units include protection against freeze-up and high discharge temperatures. All systems include self-diagnostics to ensure reliability.

The condensing units have many safety features standard to ensure high performance and lasting reliability under the most demanding situations. For example, start capacitors and relays assure dependable start-ups, especially during low voltage conditions down to 187 v.

The totally enclosed condenser-fan motor means greater reliability under rain conditions, ensuring dependable performance for many years.

Individual room comfort

Maximum comfort is provided because each space can have individual set points and may be controlled based on actual usage. The air sweep feature provided permits optimal room air mixing to eliminate hot and cold spots for occupant comfort.

In addition, year-round comfort can be provided with heat pumps.

Table of contents

Features/Benefits (cont)

Economical operation

The duct-free split system design allows individual room heating or cooling only where required. There is no need to run large supply-air fans or chilled water pumps to handle a few spaces with unique load patterns. In addition, because air is moved only in the space required, no energy is wasted moving air through ducts.

Features like the rifled copper tube with louvered aluminum plate fin coil provide maximum heat transfer.

Lightweight, compact size

The small footprint of these units provides additional benefits. The exclusive aero acoustics makes these units the most compact in the industry. Because they require minimal service and airflow clearances, condensing units can be located virtually anywhere — on the ground, roof, balcony, or under a deck.

The outdoor unit can be mounted on any type or weight roof, and the indoor units take up little valuable, rentable space. Because they are duct-free, not having to run large ductwork leaves additional space to be rented or utilized, making the building even more profitable.

In addition, the small size makes these units easily moveable. When floor plans change, the units can be quickly reinstalled.

Easy-to-use controls

The microprocessor-based control in the high-wall unit is easy to use, permitting easy changes for maximum comfort. The microprocessor offers the ultimate in comfort and efficiency. All units automatically restart and retain their memories after a power failure, eliminating unnecessary service calls and service disruption. These high wall units are equipped with a wireless remote controller.

Accessories

Customizing these duct-free split systems to your application is easily accomplished. Low-ambient temperature capability (permitting cooling operation down to –20 F outdoor ambient) is easily added on all units.

Adding a condensate pump accessory to the high wall fan coil provides installation flexibility.

Agency listings

All systems are listed with ARI (Air Conditioning & Refrigeration Institute), UL (Underwriters' Laboratories), and CEC (California Energy Commission).

Model number nomenclature

OUTDOOR UNIT

38 BNB 018 – 3

Air-Cooled Condenser

Voltage
3 – 208/230-1-60

Nominal Capacity
018 – 1-1/2 Tons
024 – 2 Tons
030 – 2-1/2 Tons
036 – 3 Tons

Unit Type
BNB – Cooling Only
BNE – Heat Pump

INDOOR UNIT

40 BNB 018 – 3

Indoor Fan Coil

Voltage
3 – 208/230-1-60

Nominal Capacity
018 – 1-1/2 Tons
024 – 2 Tons
030 – 2-1/2 Tons
036 – 3 Tons

Unit Type
BNB – High Wall Cooling Only
BNE – High Wall Heat Pump

ARI* capacity ratings

ARI CAPACITIES HIGH-WALL APPLICATIONS

INDOOR SECTION	OUTDOOR SECTION	STD. CFM		NET COOLING BTUH	TOTAL kW	SEER	EER	HIGH HEAT		
		Indoor	Outdoor					BTUH	COP	HSPF
40BNB018-3	**38BNB018-3**	726	1,100	18,600	1.90	10.0	9.6	N/A	N/A	N/A
40BNB024-3	**38BNB024-3**	726	2,400	22,600	2.40	10.5	9.5	N/A	N/A	N/A
40BNB030-3	**38BNB030-3**	700	2,300	28,000	3.10	10.0	9.1	N/A	N/A	N/A
40BNB036-3	**38BNB036-3**	970	2,300	33,000	3.80	10.0	8.8	N/A	N/A	N/A
40BNE018-3	**38BNE018-3**	726	1,100	18,600	1.90	10.0	9.6	18,600	2.90	6.80
40BNE024-3	**38BNE024-3**	726	2,400	22,600	2.40	10.5	9.5	22,800	2.80	7.00
40BNE030-3	**38BNE030-3**	700	2,300	28,000	3.10	10.0	9.1	28,000	2.80	7.00
40BNE036-3	**38BNE036-3**	970	2,300	33,000	3.80	10.0	8.8	33,400	2.00	6.80

LEGEND

COP — Coefficient of Performance
db — Dry Bulb
EER — Energy Efficiency Ratio
HSPF — Heating Seasonal Performance Factor
SEER — Seasonal Energy Efficiency Ratio
wb — Wet Bulb

*Air Conditioning & Refrigeration Institute.

NOTES:
1. Ratings are net values reflecting the effects of circulating fan heat. Ratings are based on:
   Cooling Standard: 80 deg F db, 67 deg F wb air entering evaporator and 95 deg F db air entering condenser.
   High Temperature Heating Standard: 70 deg F db air entering evaporator and 47 deg F db, 43 F wb air entering condenser.
   Low Temperature Heating Standard: 70 deg F db air entering evaporator and 17 deg F db, 15 F wb air entering condenser.
2. Total kW is for total system, including compressor and outdoor and indoor fan motors.
3. Ratings are based on 25 ft of interconnecting refrigerant lines.
4. All system ratings are based on fan coil units operating at high fan speed. Consult Physical Data tables for airflows at all available fan speeds.

Sound ratings

UNIT	SOUND POWER (dba)	SOUND PRESSURE (dba)
38BNB018-3	78.0	51.0
38BNB024-3	78.0	53.0
38BNB030-3	64.0	53.0
38BNB036-3	78.0	53.0
38BNE018-3	78.0	51.0
38BNE024-3	78.0	53.0
38BNE030-3	64.0	53.0
38BNE036-3	78.0	53.0
40BNB018-3	58.0	47.0
40BNB024-3	58.0	47.0
40BNB030-3	58.0	48.0
40BNB036-3	65.0	48.0
40BNE018-3	58.0	47.0
40BNE024-3	58.0	47.0
40BNE030-3	58.0	48.0
40BNE036-3	65.0	48.0

Physical data

INDOOR HIGH WALL UNITS
COOLING AND HEAT PUMP MODELS

UNIT	40BNB018	40BNB024	40BNB030	40BNB036	40BNE018	40BNE024	40BNE030	40BNE036
NOMINAL CAPACITY (Tons)	1.5	2.0	2.5	3.0	1.5	2.0	2.5	3.0
OPERATING WEIGHT (lb)	27.5	27.5	44.0	83.0	27.5	27.5	44.0	83.0
MOISTURE REMOVAL (pts/hr)	5	7	8	8	5	7	8	8
REFRIGERANT TYPE	R-22	R-22	R-22	R-22	R-22	R-22	R-22	R-22
METERING DEVICE	Capillary	Capillary	Capillary	Capillary	Capillary	Capillary	Capillary	Capillary
CHARGE (lb) NOTE 1	3.1	3.8	4.7	8.0	3.1	3.8	4.7	8.0
INDOOR FAN (Direct Drive)								
High — CFM	726	726	860	950	726	726	860	950
Med — CFM	565	565	730	770	565	565	730	770
Low — CFM	484	484	580	620	484	484	580	620
Motor Horsepower	1/10	1/8	1/8	1/6	1/10	1/8	1/8	1/6
REFRIGERANT LINES								
Connection Type	Flare	Flare	Flare	Flare	Flare	Flare	Flare	Flare
Liquid Line (in.)	1/4 od	3/8 od	3/8 od	3/8 od	1/4 od	3/8 od	3/8 od	3/8 od
Vapor Line (in.)	1/2 od	5/8 od	5/8 od	3/4 od	1/2 od	5/8 od	5/8 od	3/4 od
Max Length, Lift & Drop (ft)	130/66/66	130/66/66	130/66/66	130/66/66	130/66/66	130/66/66	130/66/66	130/66/66
CONDENSATE DRAIN								
Outside Dia (in.)	5/8 Dia	5/8 Dia	5/8 Dia	5/8 Dia	5/8 Dia	5/8 Dia	5/8 Dia	5/8 Dia
CONTROLS (Microprocessor)								
Remote (Wireless I/R)	Yes	Yes	Yes	Yes	Yes	Yes	Yes	Yes
Freeze Protection	Yes	Yes	Yes	Yes	Yes	Yes	Yes	Yes
Defrost Method	N/A	N/A	N/A	N/A	Demand	Demand	Demand	Demand
Warm Start	N/A	N/A	N/A	N/A	Yes	Yes	Yes	Yes
Auto Changeover	N/A	N/A	N/A	N/A	Yes	Yes	Yes	Yes
Auto Restart	Yes	Yes	Yes	Yes	Yes	Yes	Yes	Yes
Diagnostics	Yes	Yes	Yes	Yes	Yes	Yes	Yes	Yes
Timer Mode (Start/Stop)	24 Hr	24 Hr	24 Hr	24 Hr	24 Hr	24 Hr	24 Hr	24 Hr
Test Mode	Yes	Yes	Yes	Yes	Yes	Yes	Yes	Yes
Dehumidification Mode	Yes	Yes	Yes	Yes	Yes	Yes	Yes	Yes
Fan Speeds	H/M/L/Auto	H/M/L/Auto	H/M/L/Auto	H/M/L/Auto	H/M/L/Auto	H/M/L/Auto	H/M/L/Auto	H/M/L/Auto
Control Voltage	24v	24v	24v	24v	24v	24v	24v	24v
System Voltage	208/230v	208/230v	208/230v	208/230v	208/230v	208/230v	208/230v	208/230v
AIR SWEEP								
Horizontal	Automatic	Automatic	Automatic	Automatic	Automatic	Automatic	Automatic	Automatic
Vertical	Manual	Manual	Manual	Manual	Manual	Manual	Manual	Manual
FINISH	White	White	White	White	White	White	White	White

NOTES:
1. Units are shipped with a full factory charge in the outdoor unit based on 25 ft of refrigerant lines.
2. See Application Data section for long line lengths.
3. See matching outdoor unit for line lengths.
4. Capillary in outdoor unit.

OUTDOOR UNITS
COOLING ONLY MODELS

UNIT	38BNB018	38BNB024	38BNB030	38BNB036	38BNE018	38BNE024	38BNE030	38BNE036
NOMINAL CAPACITY (Tons)	1.5	2.0	2.5	3.0	1.5	2.0	2.50	3.0
OPERATING WEIGHT (lb)	143	187	198	198	143	187	198	198
REFRIGERANT TYPE	R-22	R-22	R-22	R-22	R-22	R-22	R-22	R-22
METERING DEVICE	Cap Tube	Cap Tube	Cap Tube	Cap Tube	Cap Tube	Cap Tube	Cap Tube	Cap Tube
CHARGE (lb)	3.1	3.8	4.7	8.0	3.1	3.8	4.7	8.0
OUTDOOR FAN								
CFM High/Low	1,000/830	2,400/2,050	2,750/1,830	2,455/1,660	1,000/830	2,400/2,050	2,750/1,830	2,455/1,660
Horsepower	0.6	0.6	0.6	0.6	0.6	0.6	0.6	0.6
REFRIGERANT LINES								
Connection Type	Flare	Flare	Flare	Flare	Flare	Flare	Flare	Flare
Liquid Line (in.)	1/4 od	3/8 od	3/8 od	3/8 od	1/4 od	3/8 od	3/8 od	3/8 od
Vapor Line (in.)	1/2 od	5/8 od	5/8 od	3/4 od	1/2 od	5/8 od	5/8 od	3/4 od
Max Length (ft)	130	130	130	130	130	130	130	130
Max Lift (ft)	66	66	66	66	66	66	66	66
Max Drop (ft)	66	66	66	66	66	66	66	66
COMPRESSOR								
Manufacturer	Bristol	Copeland	Copeland	Copeland	Bristol	Copeland	Copeland	Copeland
Model	H25B18QABC	ZR24K3	ZR30K3	ZR36K3	H29B18UABC	ZR24K3	ZR30K3	ZR36K3
Type	Recip	Scroll	Scroll	Scroll	Recip	Scroll	Scroll	Scroll
Oil Charge (oz)	35.0	38.0	42.0	42.0	35.0	38.0	42.0	42.0
Heater	Yes	No	No	No	Yes	No	No	No
Accumulator	Yes	Yes	Yes	Yes	Yes	Yes	Yes	Yes
CONTROLS								
Control Voltage	24 v	24 v	24 v	24 v	24 v	24 v	24 v	24 v
System Voltage	208/230	208/230	208/230	208/230	208/230	208/230	208/230	208/230
Defrost Method	N/A	N/A	N/A	N/A	Demand	Demand	Demand	Demand
FINISH	Off White	Off White	Off White	Off White	Off White	Off White	Off White	Off White

NOTES:
1. Available in 208/230v, single-phase only.
2. Unit shipped with full factory charge.

Base unit dimensions — indoor unit, size 018,024

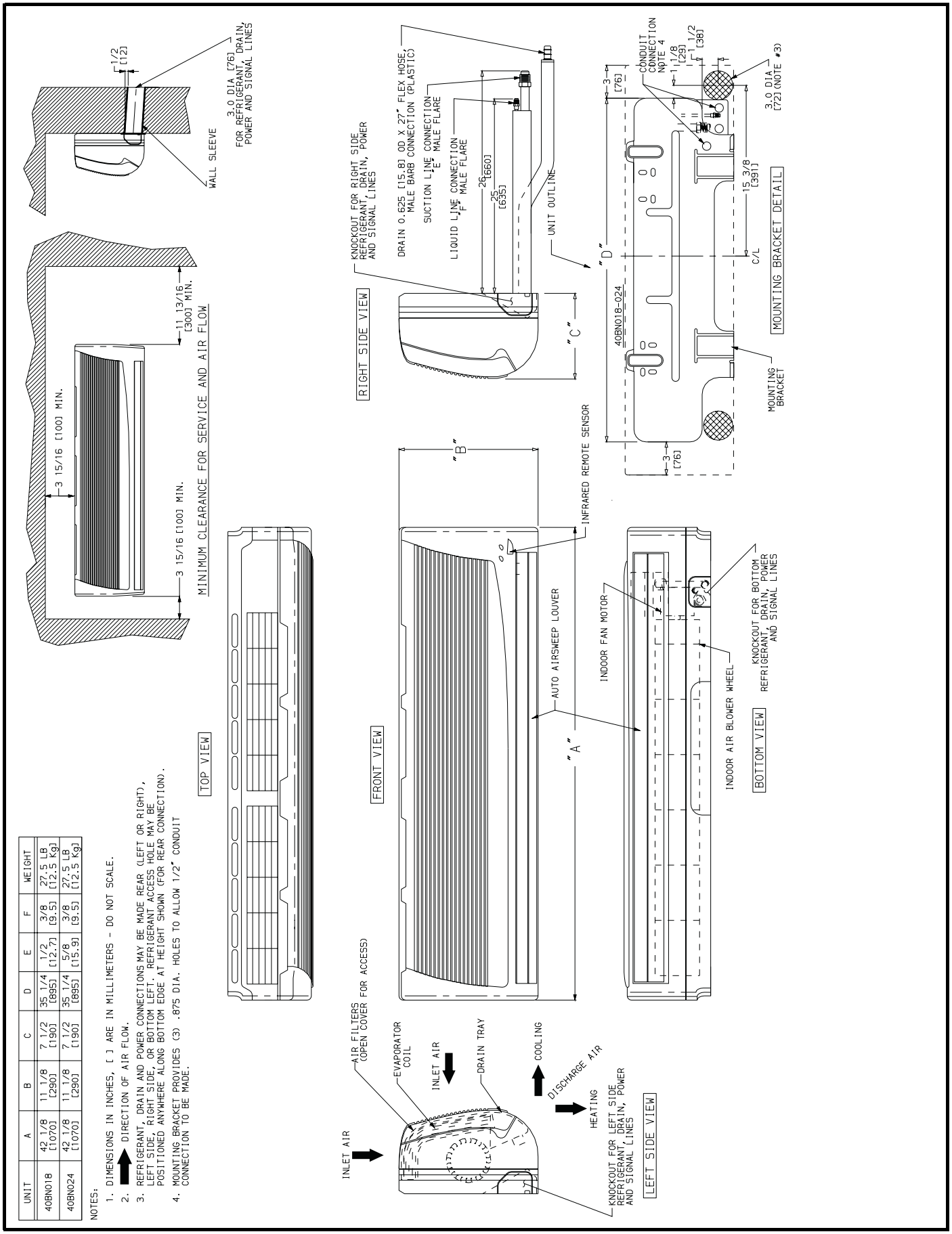

UNIT	A	B	C	D	E	F	WEIGHT
40BN018	42 1/8 [1070]	11 1/8 [290]	7 1/2 [190]	35 1/4 [895]	1/2 [12.7]	3/8 [9.5]	27.5 LB [12.5 Kg]
40BN024	42 1/8 [1070]	11 1/8 [290]	7 1/2 [190]	35 1/4 [895]	5/8 [15.9]	3/8 [9.5]	27.5 LB [12.5 Kg]

NOTES:

1. DIMENSIONS IN INCHES, [ ] ARE IN MILLIMETERS - DO NOT SCALE.
2. ⬆ DIRECTION OF AIR FLOW.
3. REFRIGERANT, DRAIN AND POWER CONNECTIONS MAY BE MADE REAR (LEFT OR RIGHT), LEFT SIDE, RIGHT SIDE, OR BOTTOM LEFT. REFRIGERANT ACCESS HOLE MAY BE POSITIONED ANYWHERE ALONG BOTTOM EDGE AT HEIGHT SHOWN (FOR REAR CONNECTION).
4. MOUNTING BRACKET PROVIDES (3) .875 DIA. HOLES TO ALLOW 1/2" CONDUIT CONNECTION TO BE MADE.

Base unit dimensions — indoor unit, size 030

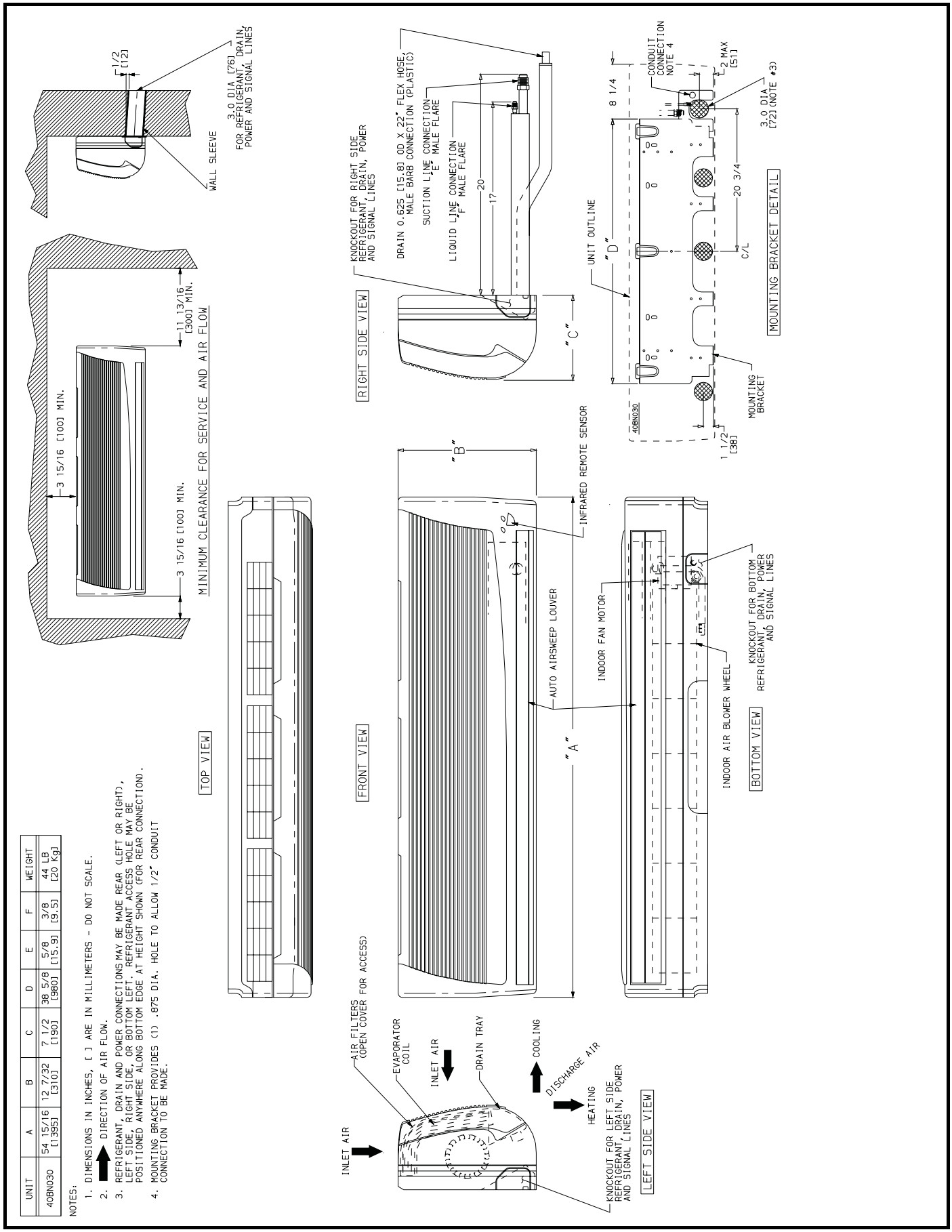

UNIT	A	B	C	D	E	F	WEIGHT
40BN030	54 15/16 [1395]	12 7/32 [310]	7 1/2 [190]	38 5/8 [980]	5/8 [15.9]	3/8 [9.5]	44 LB [20 kg]

NOTES:

1. DIMENSIONS IN INCHES, [ ] ARE IN MILLIMETERS - DO NOT SCALE.
2. ▲ DIRECTION OF AIR FLOW.
3. REFRIGERANT, DRAIN AND POWER CONNECTIONS MAY BE MADE REAR (LEFT OR RIGHT), LEFT SIDE, RIGHT SIDE, OR BOTTOM LEFT. REFRIGERANT ACCESS HOLE MAY BE POSITIONED ANYWHERE ALONG BOTTOM EDGE AT HEIGHT SHOWN (FOR REAR CONNECTION).
4. MOUNTING BRACKET PROVIDES (1) .875 DIA. HOLE TO ALLOW 1/2" CONDUIT CONNECTION TO BE MADE.

Base unit dimensions — indoor unit, size 036

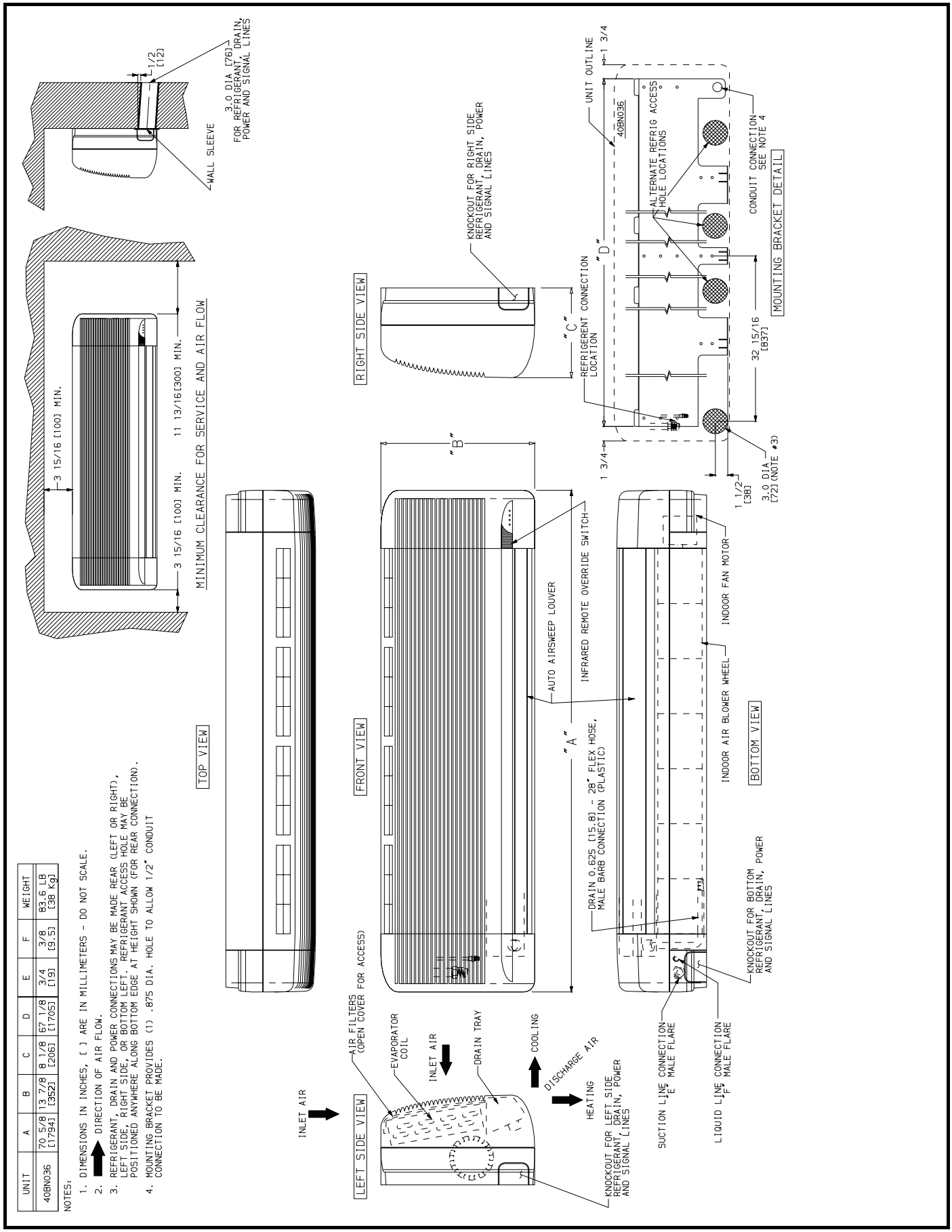

UNIT	A	B	C	D	E	F	WEIGHT
40BN036	70 5/8 [1794]	13 7/8 [352]	8 1/8 [206]	67 1/8 [1705]	3/4 [19]	3/8 [9.5]	83.6 LB [38 Kg]

NOTES:

1. DIMENSIONS IN INCHES, [ ] ARE IN MILLIMETERS - DO NOT SCALE.
2. ➡ DIRECTION OF AIR FLOW.
3. REFRIGERANT, DRAIN AND POWER CONNECTIONS MAY BE MADE REAR (LEFT OR RIGHT), LEFT SIDE, RIGHT SIDE, OR BOTTOM LEFT. REFRIGERANT ACCESS HOLE MAY BE POSITIONED ANYWHERE ALONG BOTTOM EDGE AT HEIGHT SHOWN (FOR REAR CONNECTION).
4. MOUNTING BRACKET PROVIDES (1) .875 DIA. HOLE TO ALLOW 1/2" CONDUIT CONNECTION TO BE MADE.

Base unit dimensions — outdoor unit

UNIT SIZE	A		B		C		D		E		F		G		H		I		J		K		L		M		N		P (SUCTION FLARE)		R (LIQUID FLARE)		OPERATING WGT.	
	INCHES	[mm]	INCHES	[mm]	INCHES	[mm]	INCHES	[mm]	INCHES	[mm]	INCHES	[mm]	INCHES	[mm]	INCHES	[mm]	INCHES	[mm]	INCHES	[mm]	INCHES	[mm]	INCHES	[mm]	INCHES	[mm]	INCHES	[mm]	INCHES	[mm]	INCHES	[mm]	LB	[kg.]
38BN018	25 3/16	640	34 3/8	900	12 5/8	320	14 3/16	360	0	0	15	380	5 5/16	135	0	0	24 11/16	628	5 1/8	130	8 3/4	220	2 3/8	58	16 3/4	425	15 1/4	387	1/2	12.7	3/8	9.5	143	65
38BN024	25 3/16	640	43 3/8	1100	12 5/8	320	14 3/16	360	0	0	15	380	5 5/16	135	0	0	32 5/8	828	5 1/8	130	8 3/4	220	2 7/8	73	16 3/4	425	15 1/4	387	5/8	15.9	3/8	9.5	187	85
38BN030	25 3/16	640	44 15/16	1140	15 3/4	400	15 7/16	390	33 13/16	860	15 13/16	402	4 3/4	120	10 3/16	260	44	1118	5 1/8	130	8 3/4	220	2 7/8	73	16 3/4	425	15 1/4	387	5/8	15.9	3/8	9.5	198	90
38BN036	25 3/16	640	44 15/16	1140	15 3/4	400	15 7/16	390	33 13/16	860	15 13/16	402	4 3/4	120	10 3/16	260	44	1118	5 1/8	130	8 3/4	220	2 7/8	73	16 3/4	425	15 1/4	387	3/4	19.1	3/8	9.5	198	90

NOTES:

1. REQUIRED CLEARANCES: WITH COIL FACING WALL - ALLOW 6" MINIMUM
   1.1. WITH COIL FACING WALL - ALLOW 6" MINIMUM CLEARANCE ON COIL SIDE & END, AND 2 FEET MINIMUM CLEARANCE ON COMPRESSOR END AND FAN SIDE.
   1.2. WITH FAN FACING WALL - ALLOW 2 FEET MINIMUM CLEARANCE ON FAN SIDE AND 6" ON COIL END, AND 2 FEET MINIMUM CLEARANCE ON COPRESSOR END AND COIL SIDE.
   1.3. ALLOW 2 FEET MINIMUM CLEARANCE OVER THE TOP OF UNIT.
   1.4. WITH MULTI-UNIT APPLICATION, ARRANGE UNITS SO DISCHARGE OF ONE DOES NOT ENTER INLET OF THE OTHER.
2. DIMENSIONS IN PARENTHESIS ARE IN METRIC.
3. BRACKET WITH 1.125" DIA. HOLE FOR FIELD POWER SUPPLY.

FLARE CONNECTIONS (INCHES ONLY)		
TUBE SIZE:	THREAD SIZE:	NUT HEX SIZE:
1/4	7/16-20	9/16
3/8	5/8-18	3/4
1/2	3/4-16	7/8
5/8	7/8-14	1-1/16
3/4	1-1/16-14	1-1/4

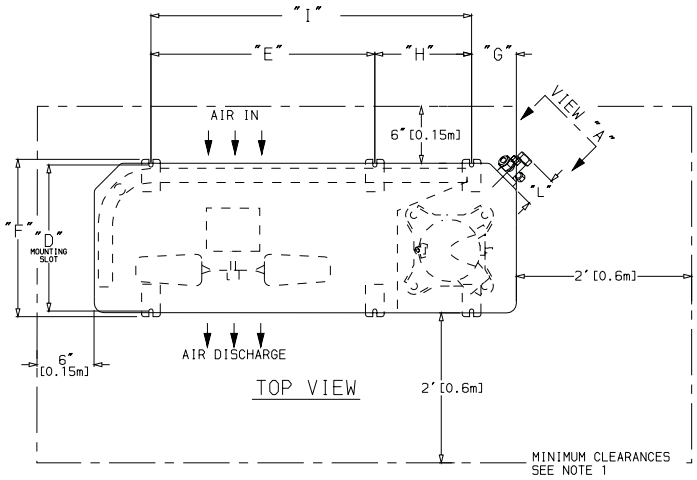

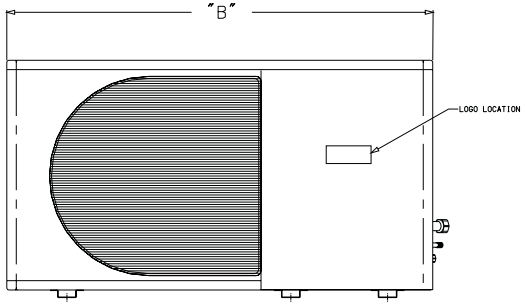

FRONT VIEW

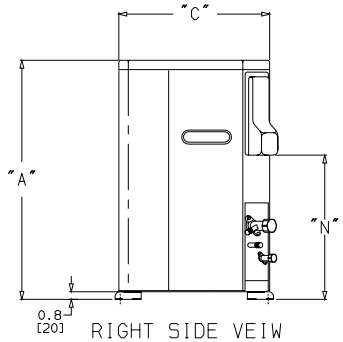

RIGHT SIDE VEIW

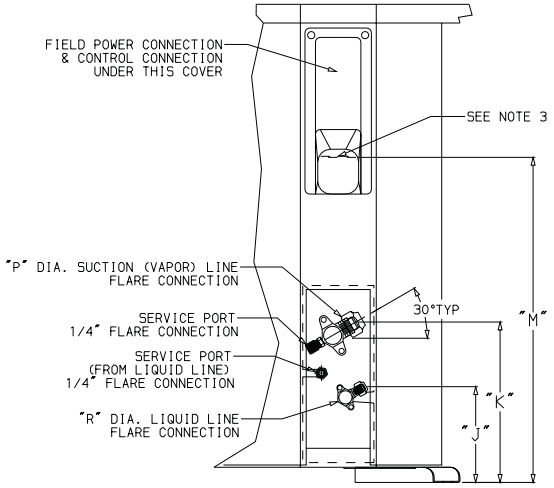

VIEW "A"

Electrical data

INDOOR UNITS

UNIT	SIZE	MCA	MOCP	FLA	FAN MOTOR AMPS	COMPRESSOR AMPS	COMPRESSOR LRA
40BNB	018	.5	15	.4	.4	N/A	N/A
	024	.5	15	.4	.4		
	030	.5	15	.4	.4		
	036	.8	15	.6	.6		
40BNE	018	.5	15	.4	.4		
	024	.5	15	.4	.4		
	030	.5	15	.4	.4		
	036	.8	15	.6	.6		

OUTDOOR UNITS

UNIT	SIZE	MCA	MOCP	FLA	FAN MOTOR AMPS	COMPRESSOR AMPS	COMPRESSOR LRA
38BNB	018	11	15	8.2	0.8	7.4	48
	024	19	30	15.0	1.4	13.6	63
	030	21	35	16.8	1.8	15.0	73
	036	25	40	20.2	1.8	18.4	95
38BNE	018	11	15	8.2	0.8	7.4	48
	024	19	30	15.0	1.4	13.6	63
	030	21	35	16.8	1.8	15.0	73
	036	25	40	20.2	1.8	18.4	95

LEGEND

FLA — Full Load Amps
LRA — Locked Rotor Amps
MCA — Minimum Circuit Amps
MOCP — Maximum Overcurrent Protection

NOTES:
1. If the indoor unit is powered from the outdoor unit, the outdoor MOCP is for both sections.
2. All units are 208/230-1-60, voltage range is 187 min to 253 max.

Typical piping and wiring — high-wall

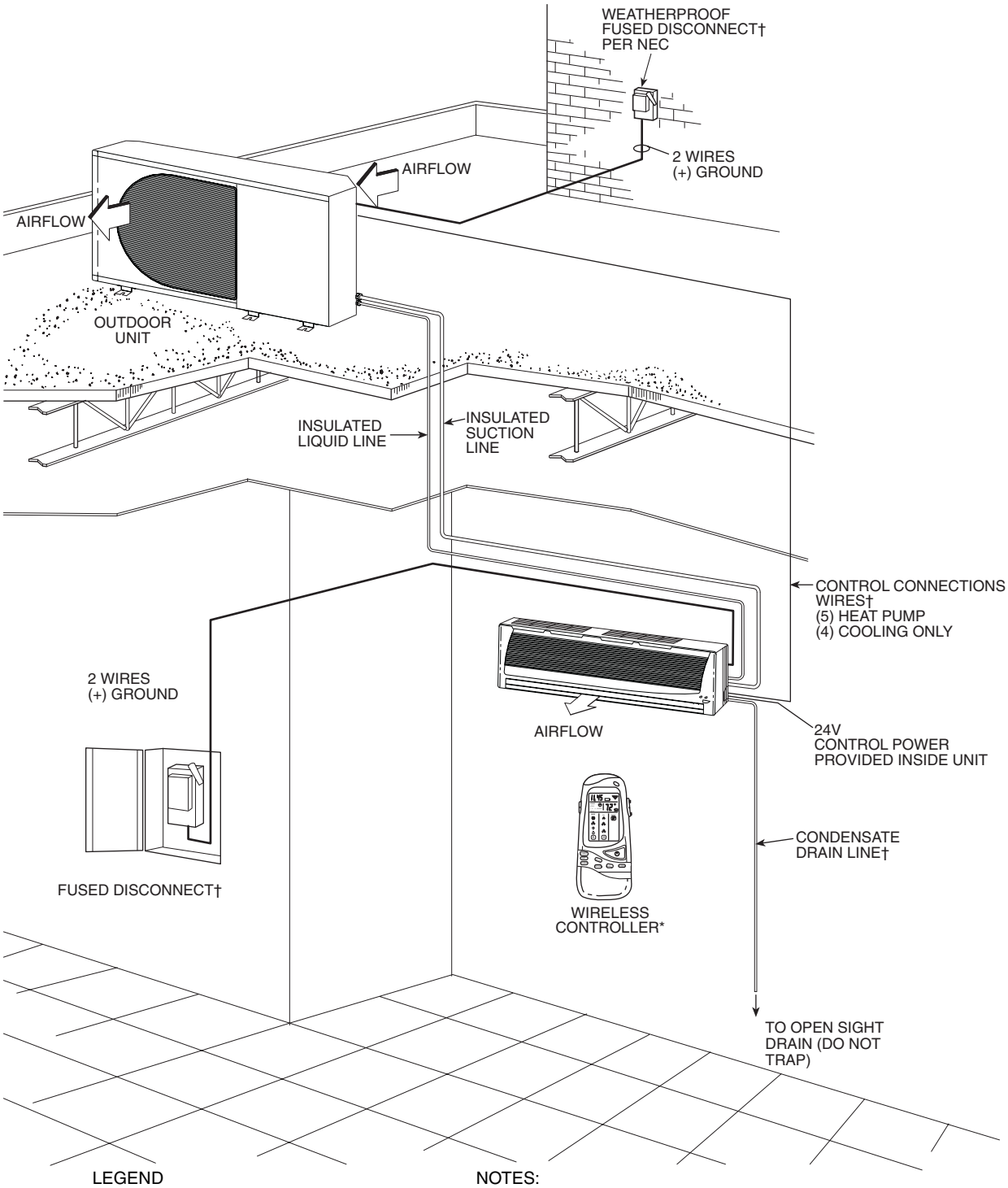

LEGEND

NEC — National Electrical Code
Piping
Line Voltage
24 V
Thermistor

*Standard.
†Field supplied.

NOTES:

1. All piping must follow standard refrigerant piping techniques.
2. All wiring must comply with the applicable local and national codes.
3. Wiring and piping shown are general points-of-connection guides only and are not intended for a specific installation.
4. Insulate condensate drain if installed in a conditioned space.
5. If local code permits, power connections may be run from the outdoor unit to the indoor unit as shown on schematic drawings.

Application data

Unit selection

Select equipment to either match or be slightly less than anticipated peak load. This provides better humidity control, fewer unit cycles, and less part-load operation.

For units used in spaces with high sensible loads, base equipment selection on unit sensible load, not on total anticipated load. Adjust for anticipated room wet bulb temperature to avoid undersizing equipment.

Unit mounting (outdoor)

Unit leveling — For reliable operation, units should be level in all planes.

Clearance — Adequate clearance must be provided for airflow. See dimensional drawings for proper clearances. The condensing units are designed for free-blow application. Air inlets and outlets should not be restricted. Outdoor fan external static pressure available is less than 0.1 in. wg.

Unit location — Cooling units may be stacked 2 high. Units may be wall mounted, pad mounted at ground level, roof mounted, or mounted on or under a deck or patio. Be sure water from roof does not drain directly onto the unit.

Unit mounting (indoor)

Clearance — Provide adequate clearance for airflow. The unit return and discharge should not be obstructed by furniture, curtains, or anything which may cause unit short cycling or air recirculation. See base unit dimensional drawings on pages 8-10 for required clearances.

Unit location — When selecting unit location, select a location which will provide the best air circulation for the room.

Units should be positioned as high as possible on the wall for best air circulation. Allow adequate clearances above the unit for servicing (removing unit covers). Place the unit in the middle of the wall selected (if possible). Select an outside wall if available to make piping easier, and place the unit so it faces the normal location of room occupants.

Support

Adequate support must be provided to support the weight of all fan coils. Refer to the Physical Data section on page 6 for fan coil weights, and the base unit dimensional drawings on pages 8-10 for the location of mounting brackets.

System operating conditions

Operating limits:

OUTDOOR CONDENSING UNITS

CONDITION	
Maximum Cooling Ambient (F)	125
Minimum Cooling Ambient (F) (without accessory low-ambient kit)	55
Minimum Cooling Ambient (F) (with accessory low-ambient kit)	–20
Minimum Cooling Return-Air Temperature (F)	55
Maximum Cooling Return-Air Temperature (F)	95
Saturated Suction Temperature Range Minimum (F) Maximum (F)	 –15 55
Saturated Condensing Temperature Range Minimum (F) Maximum (F)	 80 150
Maximum Compressor Discharge Temperature (F)	275
Minimum Discharge Superheat (F)	60

FAN COIL UNITS

CONDITION	
Maximum Room Temperature (F)	84
Minimum Room Temperature (F)	64
Maximum Return Air (F) Dry-Bulb Wet-Bulb	 85 72
Maximum Saturated Suction Temperature (F)	55
Minimum Saturated Suction Temperature (F)	27

Low-ambient operation

Units can operate in cooling down to 55 F under all conditions without a low-ambient kit.

Units equipped with accessory low-ambient kits should also be equipped with an accessory crankcase heater.

Metering devices

Factory-installed capillary tubes are used as a metering device.

Drain connections

Install drains to meet local sanitation codes. If adequate gravity drainage cannot be provided, unit should be equipped with accessory condensate pump. High wall fan coil unit condensate pumps have an 6.5 ft suction lift.

See base unit dimensional drawings on pages 8-10 for drain location and size.

Drain connections may be routed through alternate locations. See base unit dimensional drawing on pages 8-10 for possible alternate locations.

Refrigerant lines

General refrigerant line sizing:

1. All charges, line sizing, and capacities are based on runs of 10 to 50 ft.
2. Refrigerant lines should not be buried in the ground. If it is necessary to bury the lines, not more than 36 in. should be buried. Provide a minimum 6-in. vertical rise to the service valves to prevent refrigerant migration.
3. Both lines must be insulated. Use a minimum of $^1/_2$-in. thick insulation. Closed-cell insulation is recommended in all long-line applications.
4. Special consideration should be given to isolating interconnecting tubing from the building structure. Isolate the tubing so that vibration or noise is not transmitted into the structure.
5. Units are shipped with a full charge of R-22 refrigerant. Charge is based on 10 to 50 ft of line. Add additional charge by weight as necessary and check the charge with a superheat calculator.

Long-line applications:

1. Mixed phase lines on all units should be $^3/_8$ in. only. DO NOT resize mixed phase lines for additional length.
2. Adjust charge to required amount by adding charge and checking superheat.

For line lengths over 50 ft:

A crankcase heater should be added to the compressor. Crankcase heaters help prevent refrigerant migration to the compressor during the off cycle.

Typical wiring schematics — size 018, 024 heat pump system

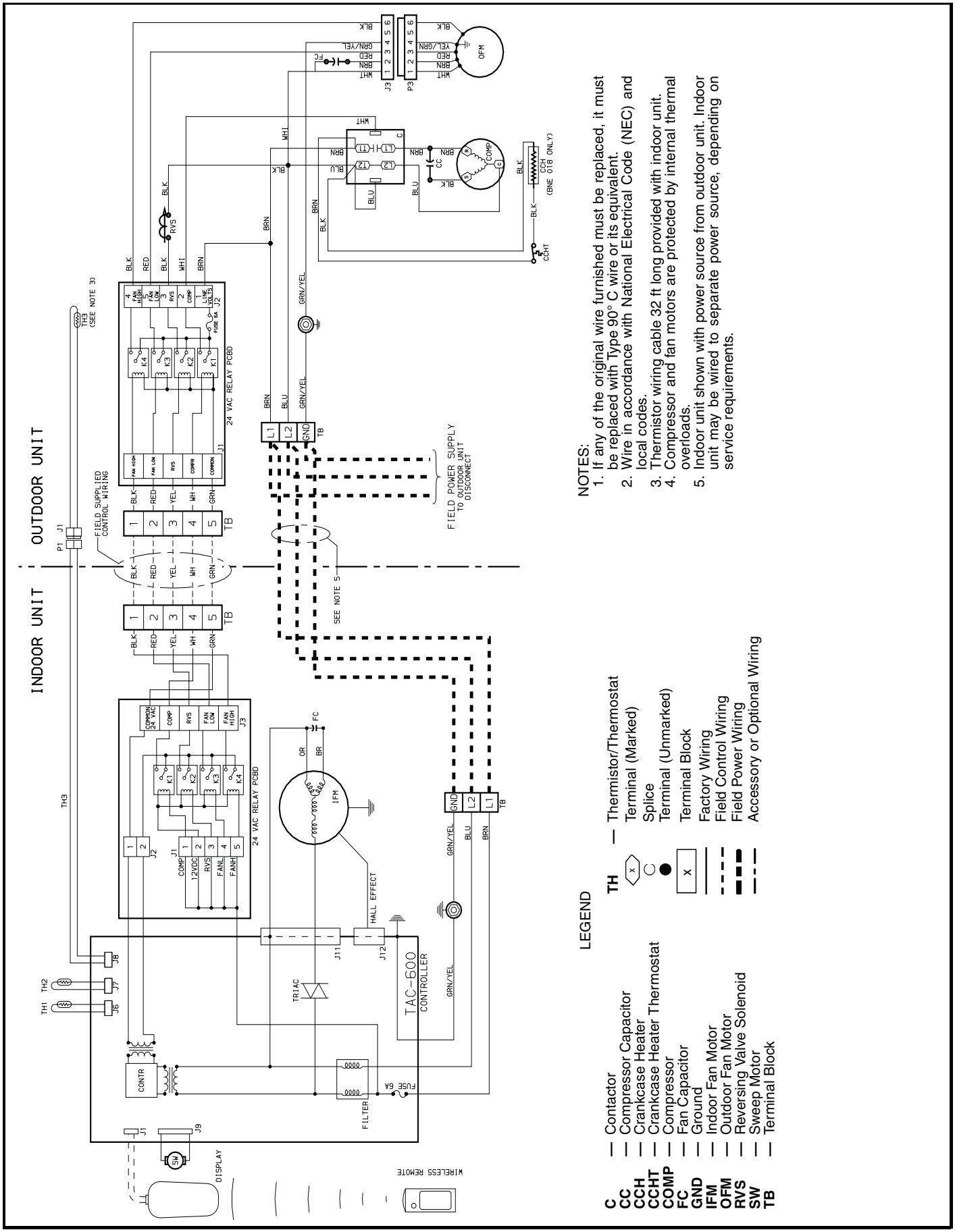

Typical wiring schematics — size 030 heat pump system

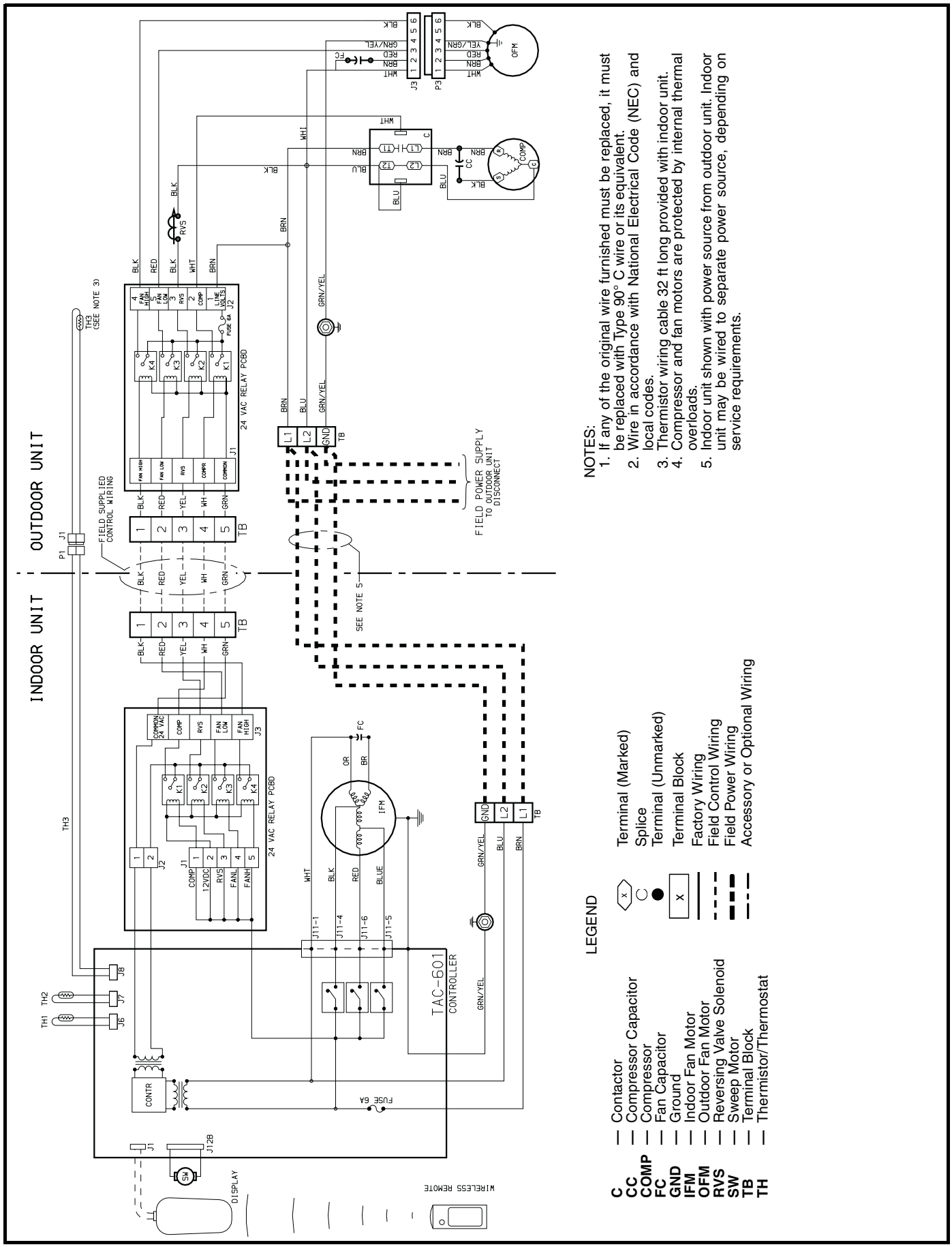

NOTES:
1. If any of the original wire furnished must be replaced, it must be replaced with Type 90° C wire or its equivalent.
2. Wire in accordance with National Electrical Code (NEC) and local codes.
3. Thermistor wiring cable 32 ft long provided with indoor unit.
4. Compressor and fan motors are protected by internal thermal overloads.
5. Indoor unit shown with power source from outdoor unit. Indoor unit may be wired to separate power source, depending on service requirements.

Typical wiring schematics — size 036 heat pump system

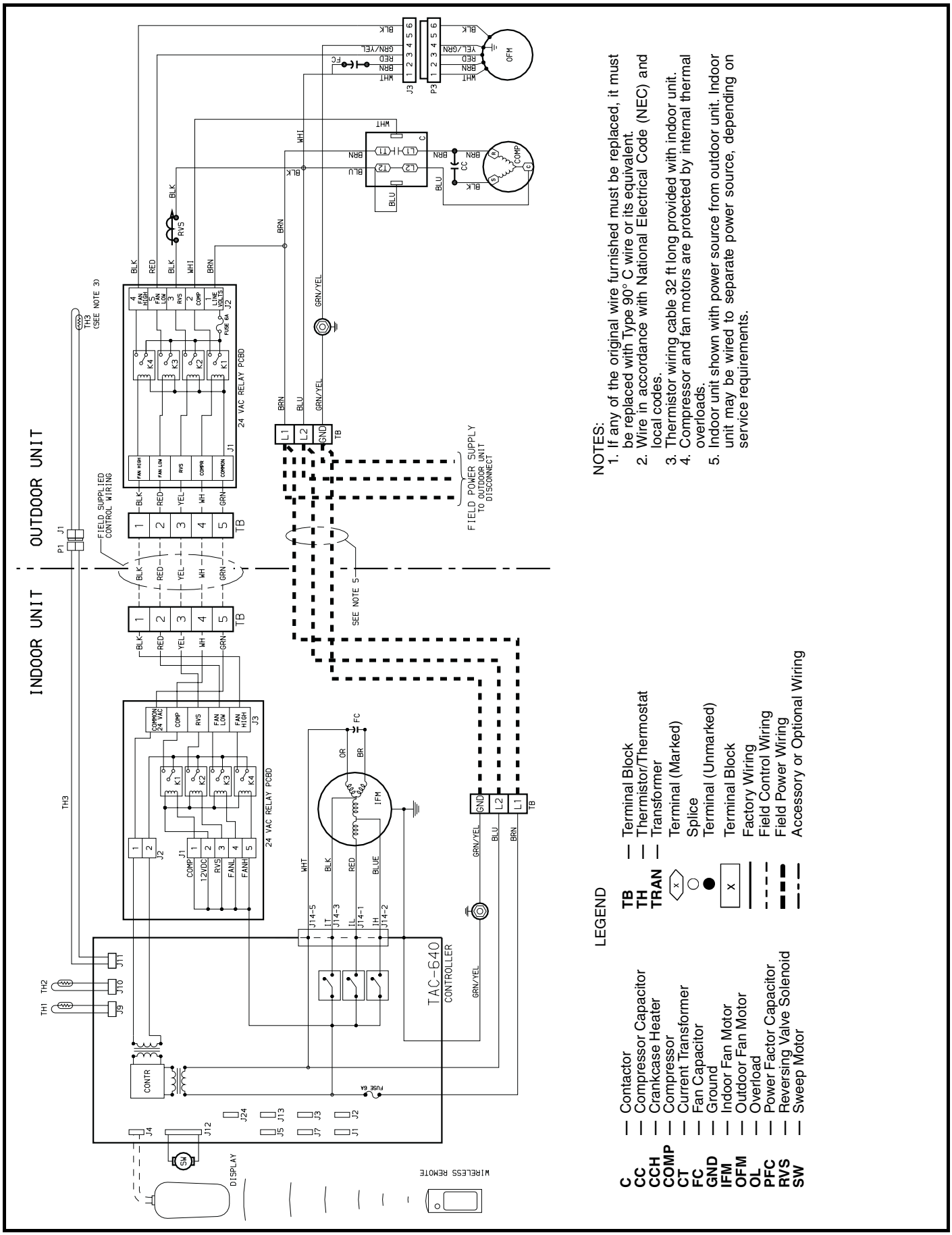

Typical wiring schematics — size 018, 024 cooling only system

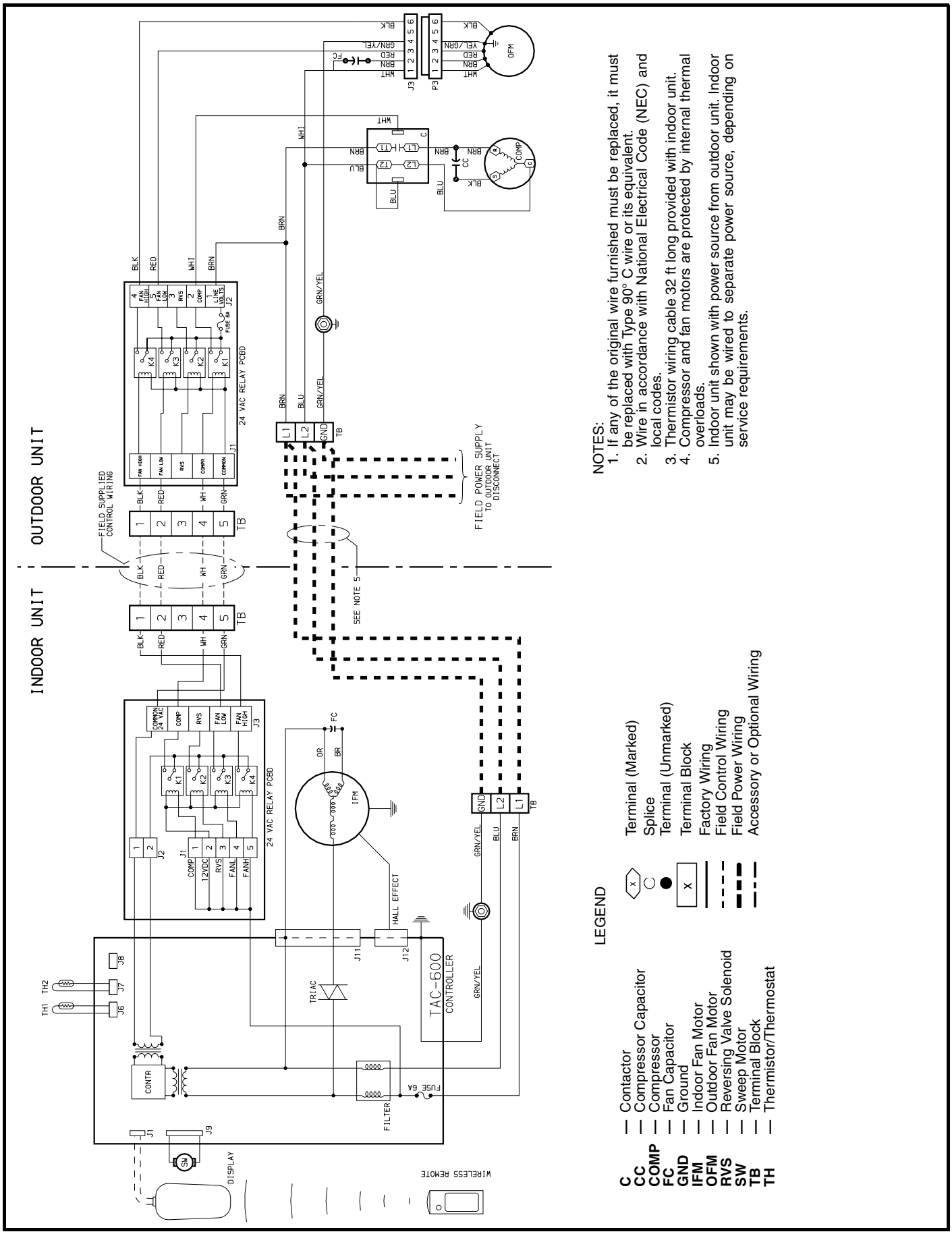

Typical wiring schematics — size 030 cooling only system

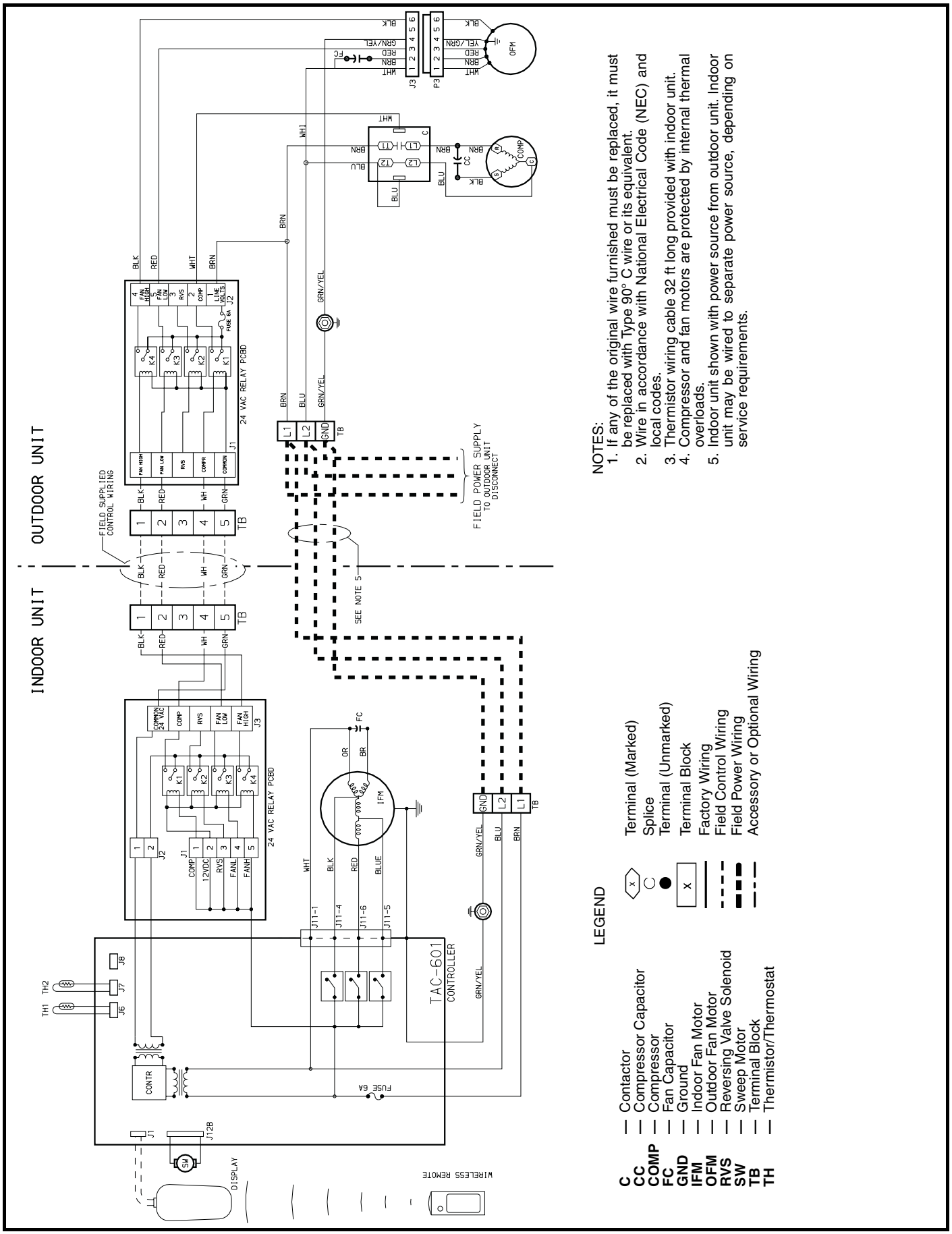

Typical wiring schematics — size 036 cooling only system

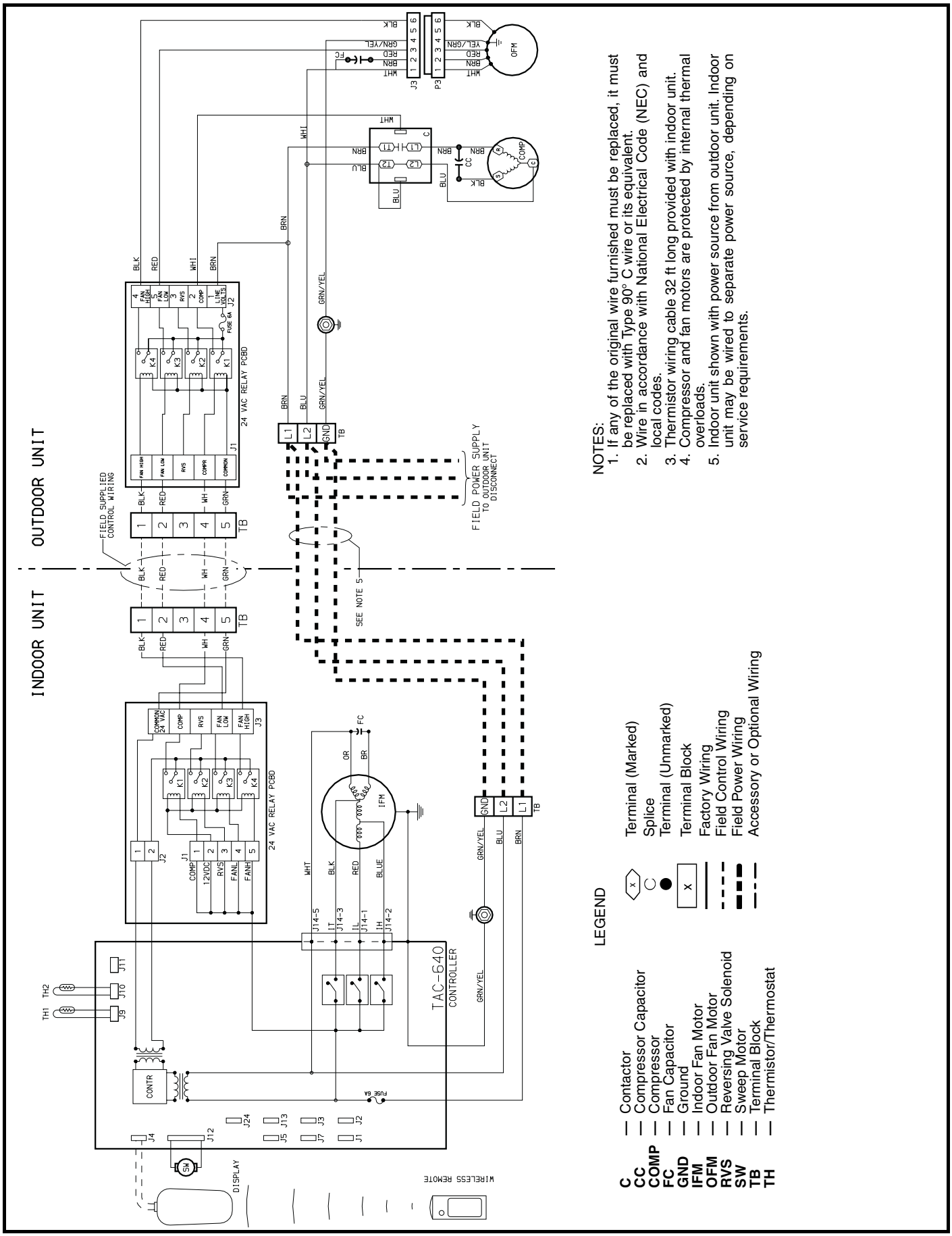

Controls

The Duct Free System can be set up and operated from the remote control (provided). If the remote is misplaced, the system can be operated from the "Auto" setting on the unit.

Operating modes

The duct free system has 5 operating modes:

- Cooling
- Fan Only
- Heating (if applicable)
- Dehumidification
- Auto

Cooling — In Cooling mode, the system cools, dries and filters room air.

Fan only — In Fan Only mode, the system filters and circulates room air without changing room air temperature.

Heating — In Heating mode, the system heats and filters room air.

Dehumidification — In Dehumidification mode, the system dries, filters and cools room air. This mode ***does not*** take the place of a dehumidifier.

Auto — In Auto mode, the system will automatically cool or heat room air according to a selected temperature (set point).

If temperature of room air is lower than set point, the system will operate in Heating mode. If temperature of room air is higher than set point, the system will operate in Cooling mode.

Remote control

The remote control transmits commands to set up and operate the system. The controller has a window display panel that shows the current system status. The controller can be secured to a surface when used with the mounting rack provided.

The remote control can perform the following functions:

- Turn the system ON and OFF
- Select operating mode
- Adjust room air temperature and fan speed
- Set time periods for automatic system operation

Remote control operation — The remote control has 3 buttons used for operating and controlling the system:

- MODE button — changes operating mode
- UP/DOWN button — selects desired operating mode
- ON/OFF button — turns the system on or off and transmits programing selections to unit.

NOTE: When transmitting a command from the controller to the unit, be sure to point the controller toward the right side of the unit. The unit will confirm receipt of a command by sounding 2 audible beeps.

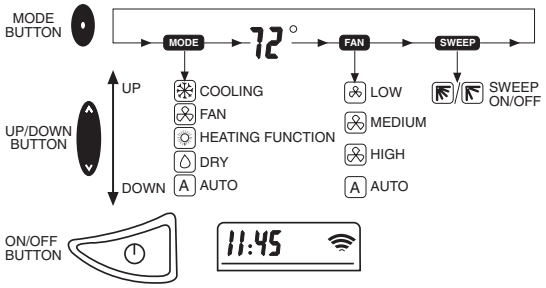

REMOTE CONTROL BUTTONS — PROGRAMMING OPTIONS

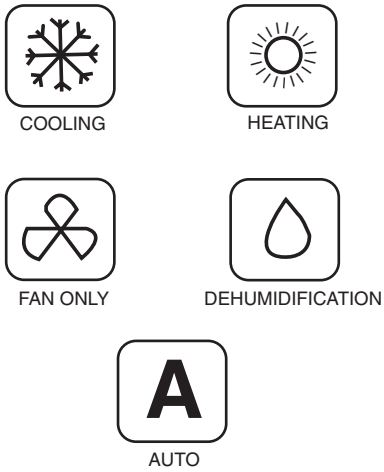

OPERATING MODE INDICATORS ON REMOTE CONTROL

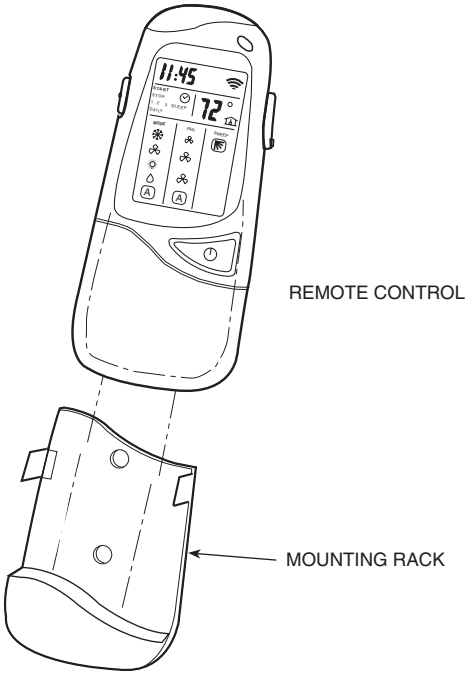

Controls (cont)

NOTE: If unit is operating in Dehumidification mode the fan will only operate in Low speed and cannot be changed.

Temperature settings — The temperature settings can be easily changed by pointing the controller toward the unit and pressing the UP/DOWN button until desired temperature appears on screen. The symbol appears each time the ON/OFF button is pressed.

NOTE: If placing the air deflector in a fixed position is chosen, the deflector stops at the angle in which it was located when the ON/OFF button was pressed.

Programming time periods — The duct free system can be programmed to operate at desired levels. Be sure to set the clock before programming the system.

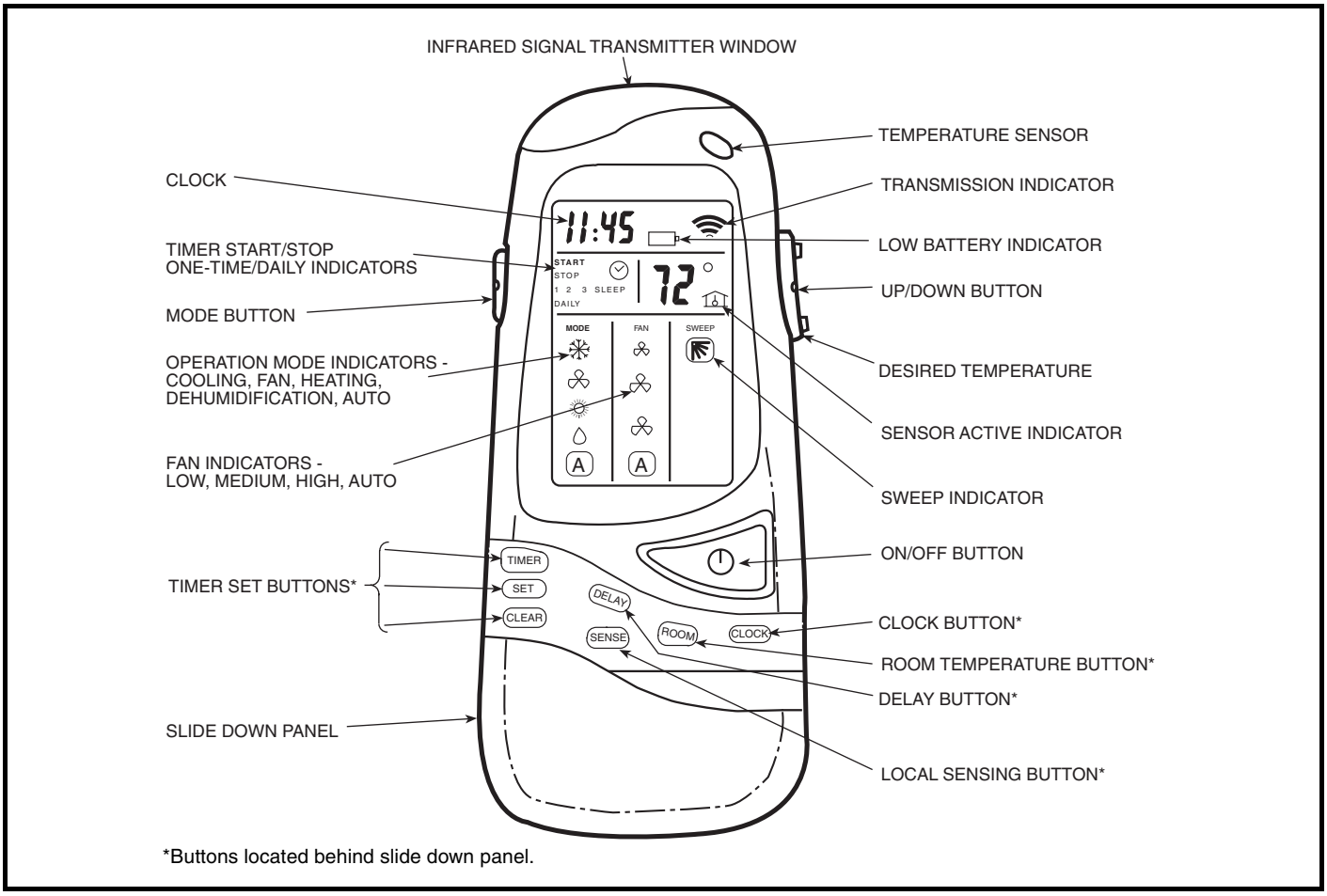

Guide specifications — indoor unit

Fan Coil Units

HVAC Guide Specifications

Size range: **$1^1/_2$ to 3 Ton Capacity**

Model Number: **40BNB, 40BNE**

Part 1 — General

1.01 SYSTEM DESCRIPTION

Indoor, wall-mounted, direct-expansion fan coil to be matched with the 38BN condensing or heat pump units.

1.02 QUALITY ASSURANCE

Unit shall be rated per ARI Standards 210/240 and listed in the ARI directory as a matched system. Units shall be UL listed for sale in the U.S.A. and Canada.

1.03 DELIVERY, STORAGE, AND HANDLING

Units shall be stored and handled per unit manufacturer's recommendations.

1.04 WARRANTY

One-year parts.

Part 2 — Products

2.01 EQUIPMENT

A. General:

Indoor, direct-expansion, wall-mounted fan coil. Unit shall be complete with cooling/heating (heat pump systems only) coil, fan, fan motor, piping connectors, electrical controls, microprocessor control system, and integral temperature sensing. Unit shall be furnished with integral wall-mounting bracket and mounting hardware, and thermistor interconnection cable.

B. Unit Cabinet:

Cabinet discharge and inlet grilles shall be attractively styled, high-impact polystyrene. Cabinet shall be fully insulated for improved thermal and acoustic performance.

C. Fans:

Indoor fan shall be 3-speed tangential direct-drive blower type with air intake at the upper front face of the unit and discharge at the bottom front. Automatic, motor-driven vertical air sweep shall be provided standard.

Air sweep operation shall be user selectable. Horizontal direction may be manually adjusted (using remote controller) and air sweep may be manually set.

D. Coil:

Coil shall be copper tube with aluminum fins and galvanized steel tube sheets. Fins shall be bonded to the tubes by mechanical expansion. A drip pan under the coil shall have a drain connection for hose attachment to remove condensate. Condensate pan shall have internal trap and auxiliary drip pan under coil header.

E. Controls:

Controls shall consist of a microprocessor-based control system which shall control space temperature, determine optimum fan speed, and run self diagnostics. The temperature control range shall be from 54 F to 90 F. The unit shall have the following functions as a minimum.

1. An automatic restart after power failure at the same operating conditions as at failure.
2. A timer function to provide a minimum 24-hour timer cycle for system.
3. Temperature-sensing controls shall sense return-air temperature. Indoor-air high discharge temperature shutdown shall be provided.
4. Indoor coil freeze protection.
5. Wireless infrared remote control to enter set points and operating conditions.
6. Automatic airsweep control to provide on or off activation of airsweep louvers.
7. Dehumidification mode shall provide increased latent removal capability by modulating system operation and set point temperature.
8. Fan only operation shall provide room air circulation when no cooling is required.
9. Diagnostics shall provide continuous checks of unit operation and warn of possible malfunctions. Error messages shall be displayed at the unit.
10. An indoor to outdoor thermistor connection cable shall be provided with the fan coil unit.
11. Fan speed control shall be user-selectable: high, medium, low, or microprocessor automatic operation during all operating modes.
12. A time delay shall prevent compressor restart in less than 3 minutes.
13. Automatic heating-to cooling changeover to provide automatic heating and cooling operation. Control shall include deadband to prevent rapid mode cycling.
14. Demand defrost shall be provided and shall minimize defrost cycles by internally adjusting defrost timing based on frost accumulation.
15. Indoor coil high temperature protection shall be provided to detect excessive indoor discharge temperature when unit is in heat pump mode.

F. Filters:

Unit shall have filter track with factory-supplied cleanable filters.

G. Electrical Requirements:

Unit shall operate on 208/230 v, 60 Hz power supply as specified on the equipment schedule. Power and control connections shall have terminal block connections.

Guide specifications — indoor unit (cont)

H. Refrigerant Lines:

The indoor units shall have rotatable refrigerant lines for penetration through the wall using flare connections. All units shall have flare connections and a 90-degree suction elbow shall be provided for rear connection.

I. Special Features (Field Installed):

Condensate Pump:

The condensate pump shall remove condensate from the drain pan when gravity drainage cannot be used. Pump shall be designed for quiet operation. Pump shall consist of two parts: an internal reservoir/sensor assembly, and a remote sound-shielded pump assembly. The lift capability of the condensate pump shall be 1 to 20 ft. A level sensor on the condensate pan shall stop cooling operation if the level in the condensate pan is unacceptable.

Guide specifications — outdoor unit

Condensing Units

HVAC Guide Specifications

Size Range: **$1^1/_2$ to 3 Ton Capacity**
Model Number: **38BNB, 38BNE**

Part 1 — General

1.01 SYSTEM DESCRIPTION

A. Outdoor-mounted, air-cooled split system outdoor section suitable for on-the-ground, rooftop, wall hung, balcony, or under-deck installation. Unit shall consist of a scroll or reciprocating compressor, an air-cooled coil, propeller-type draw-thru outdoor fans, full refrigerant charge, and control box. Unit shall discharge air horizontally as shown on the contract drawings. Units shall function as the outdoor component of an air-to-air system.

B. Units shall be used in a refrigeration circuit matched to a duct-free cooling fan coil unit.

1.02 QUALITY ASSURANCE

A. Unit construction shall comply with ANSI/ASHRAE 15, latest revision, and with the NEC.

B. Units shall be constructed in accordance with UL standards.

C. Units shall be listed in the CEC directory.

D. Unit cabinet shall be capable of withstanding Federal Test Standard No. 141 (Method 6061) 500-Hour Salt Spray Test.

E. Air-cooled condenser coils shall be leak-tested at 350 psig air pressure.

1.03 DELIVERY, STORAGE, AND HANDLING

Units shall be shipped in one piece and shall be stored and handled per unit manufacturer's recommendations.

1.04 WARRANTY

1 year parts, 5 year compressor.

Part 2 — Products

2.01 EQUIPMENT

A. General:

Factory assembled, single piece, air-cooled outdoor unit. Contained within the unit enclosure shall be all factory wiring, piping, controls, compressor, full charge of R-22 refrigerant, and special features required prior to field start-up.

B. Unit Cabinet:

1. Unit cabinet shall be constructed of galvanized-steel, bonderized and coated with a baked-enamel finish.
2. Unit access panels shall be removable with minimal screws and shall provide full access to the compressor, fan, and control components.
3. Outdoor compartment shall be isolated and have an acoustic lining to assure quiet operation.

C. Fans:

1. Outdoor fans shall be direct-drive propeller type, and shall discharge air horizontally. Fans shall draw air through the outdoor coil.
2. Outdoor-fan motors shall be totally enclosed, single-phase motors with class B insulation and permanently lubricated sleeve bearings. Motor shall be protected by internal thermal overload protection.
3. Shaft shall have inherent corrosion resistance.
4. Fan blades shall be corrosion resistant and shall be statically and dynamically balanced.
5. Outdoor fan openings shall be equipped with coated protection grille over fan and coil.

D. Compressor:

1. Compressor shall be fully hermetic reciprocating or scroll type.
2. Compressor shall be equipped with oil system, operating oil charge, and motor. Internal overloads shall protect the compressor from overtemperature and overcurrent. Scroll compressors shall also have high discharge gas temperature protection if required.
3. Motor shall be NEMA rated class F, suitable for operation in a refrigerant atmosphere.
4. Heat pump reciprocating compressors shall be equipped with crankcase heaters to minimize liquid refrigerant accumulation in compressor during shutdown and to prevent refrigerant dilution of oil.
5. Compressor assembly shall be installed on rubber vibration isolators.
6. Compressors shall be single-phase as specified on the contract drawings.

E. Outdoor Coil:

Coil shall be constructed of aluminum fins mechanically bonded to internally enhanced, seamless copper tubes which are cleaned, dehydrated, and sealed.

F. Refrigeration Components:

Refrigerant circuit components shall include brass external mixed phase line service valve, suction line service valve with service gage connection port, service gage port connections on compressor suction and discharge lines with Schrader-type fittings with brass caps, accumulator, pressure relief, and a full charge of refrigerant.

G. Controls and Safeties:

Operating controls and safeties shall be factory selected, assembled, and tested. The minimum control functions shall include the following:

1. Controls:
   a. Automatic restart on power failure.
   b. A time delay control sequence provided through the fan coil board.

c. Automatic outdoor-fan motor protection.
d. Start capacitor and relay (single-phase units without scroll compressors).

2. Safeties:
a. System diagnostics provided through indoor controls.
b. Compressor motor current and temperature overload protection.
c. Outdoor fan failure protection.

H. Electrical Requirements:
1. All units shall operate on single-phase, 60 cycle power at 208/230 v.
2. Unit electrical power shall be a single point connection.
3. Unit control voltage to the indoor-fan coil shall be 24 v.
4. All power and control wiring must be installed per NEC and all local building codes.
5. High-voltage and low-voltage terminal block connections.

I. Special Features:

Low-Ambient Kit:

Control shall regulate fan-motor cycles in response to saturated condensing pressure of the unit. The control shall be capable of maintaining a condensing temperature of 100 F ± 10 F with outdoor temperatures to –20 F. Installation of kit shall not require changing the outdoor-fan motor.